Cambridge Assessment International Education

Cambridge International AS & A Level

CANDIDATE NAME									
CENTRE NUMBER						CANDIDATE NUMBER				

3956050598

PHYSICS **9702/32**

Paper 3 Advanced Practical Skills 2 **May/June 2020**

2 hours

You must answer on the question paper.

You will need: The materials and apparatus listed in the confidential instructions

INSTRUCTIONS

- Answer **all** questions.
- Use a black or dark blue pen. You may use an HB pencil for any diagrams or graphs.
- Write your name, centre number and candidate number in the boxes at the top of the page.
- Write your answer to each question in the space provided.
- Do **not** use an erasable pen or correction fluid.
- Do **not** write on any bar codes.
- You will be allowed to work with the apparatus for a maximum of 1 hour for each question.
- You should record all your observations in the spaces provided in the question paper as soon as these observations are made.
- You may use a calculator.
- You should show all your working and use appropriate units.

INFORMATION

- The total mark for this paper is 40.
- The number of marks for each question or part question is shown in brackets [ ].

For Examiner's Use	
1	
2	
Total	

This document has **12** pages. Blank pages are indicated.

© UCLES 2020

You may not need to use all of the materials provided.

1 In this experiment, you will investigate a pendulum made from a wooden strip with masses fixed at one end.

(a) Some of the apparatus has been assembled for you.

- Pass the nail through the hole in the strip furthest from the masses.
- Fix the nail securely in the clamp.
- Complete the set-up of the apparatus as shown in Fig. 1.1.

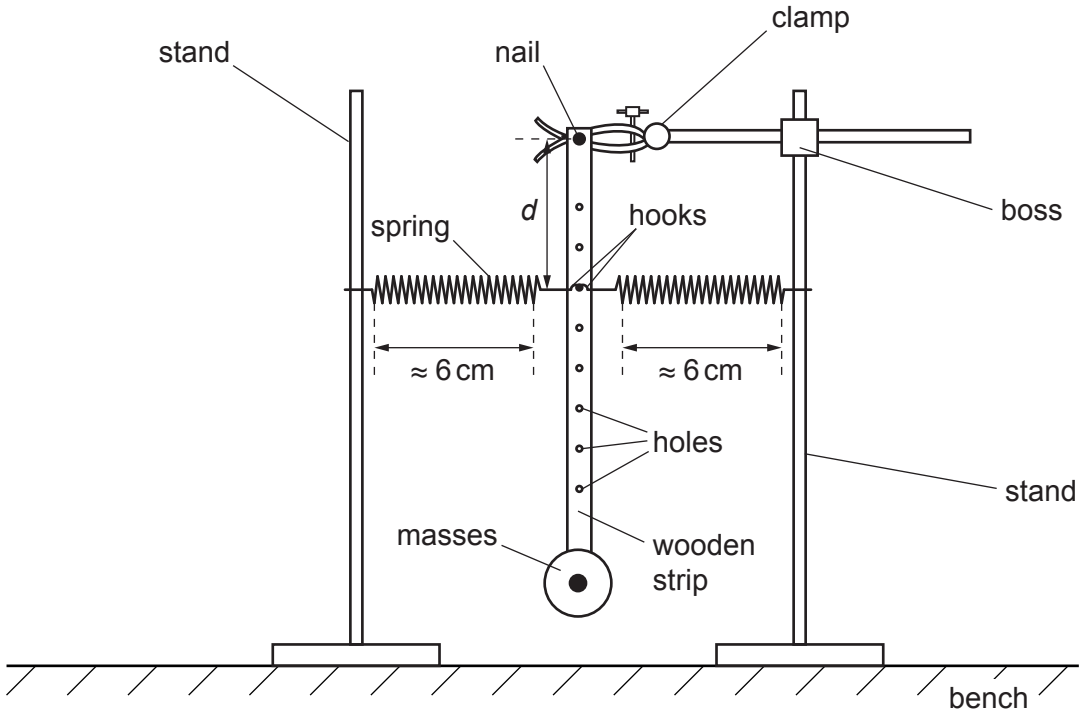

Fig. 1.1 (not to scale)

- The hooks at the ends of the springs should pass through one of the holes in the strip.

  Position the stands so that the coiled section of each spring is of approximate length 6 cm and the strip is vertical.

- The distance along the strip between the nail and the hole with the hooks is *d*.

  Measure and record *d*.

d = ... cm [1]

(b) ● Move the bottom of the strip towards one of the stands and release it so that it oscillates.

● Take measurements to determine the period T of these oscillations.

T = ... s [2]

(c) Move the hooks to a different hole in the strip. Measure d and T. Repeat until you have six sets of values of d and T.

Record your results in a table. Include values of d^2 and $\frac{1}{T^2}$ in your table.

[9]

(d) (i) Plot a graph of $\frac{1}{T^2}$ on the y-axis against d^2 on the x-axis. [3]

(ii) Draw the straight line of best fit. [1]

(iii) Determine the gradient and y-intercept of this line.

gradient = ...

y-intercept = ...

[2]

© UCLES 2020

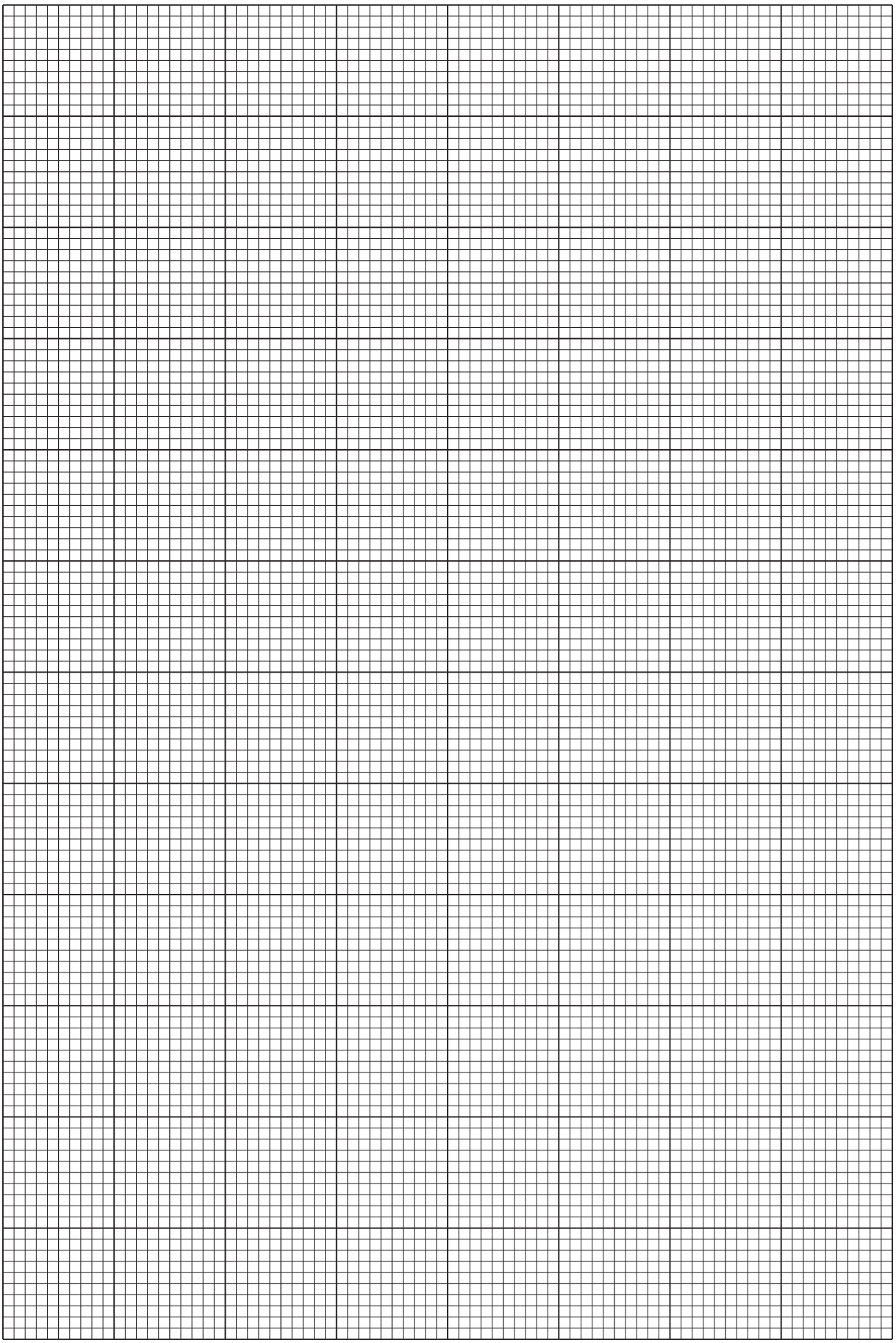

© UCLES 2020

[Turn over

(e) It is suggested that the quantities T and d are related by the equation

$$\frac{1}{T^2} = ad^2 + b$$

where a and b are constants.

Use your answers in **(d)(iii)** to determine the values of a and b.
Give appropriate units.

a = ...

b = ...
[2]

[Total: 20]

You may not need to use all of the materials provided.

2 In this experiment, you will investigate the bending of a rod under a compressive force.

(a) You are provided with two thin rods. Measure and record the length L and diameter d of the **longer** rod.

L = ...

d = ...
[2]

(b) • Assemble the apparatus as shown in Fig. 2.1 using the longer rod.
Position the ends of the rod in the shallow holes in the wooden strip and the block.

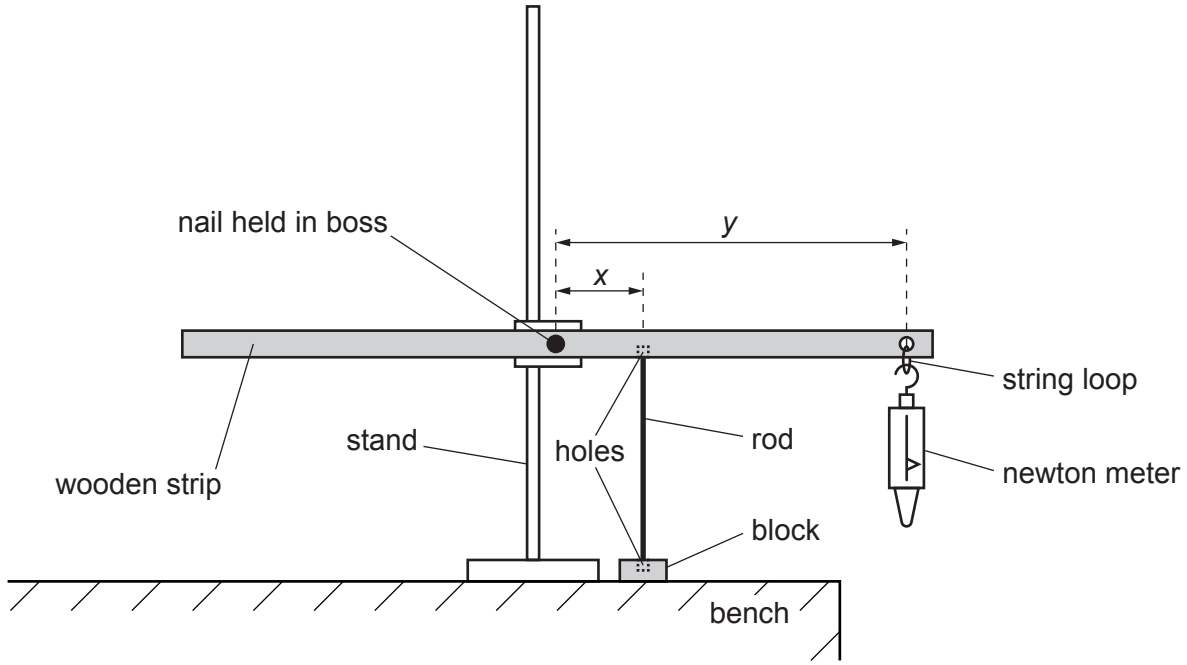

Fig. 2.1

- Adjust the apparatus so that the rod is vertical and the wooden strip is parallel to the bench.

- The distance between the nail and the top of the rod is x and the distance between the nail and the string loop is y, as shown in Fig. 2.1.

  Measure and record x and y.

x = ...

y = ...
[1]

(c) • Slowly pull the newton meter down until the rod bends in the middle by approximately 1 cm, as shown in Fig. 2.2.

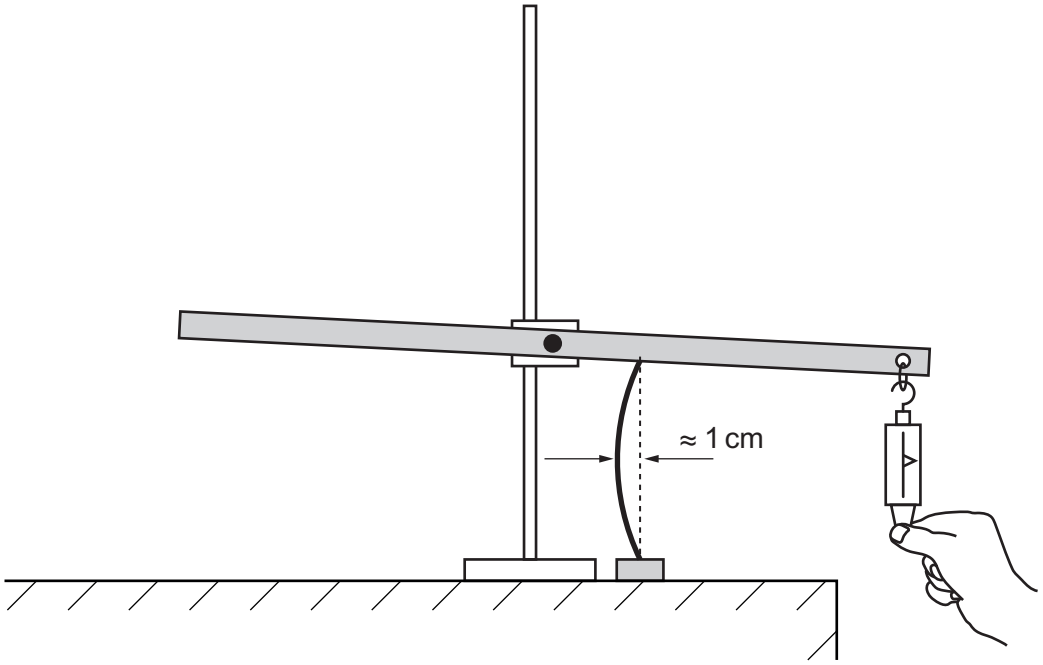

Fig. 2.2

• Record the force F_m needed to bend the rod by approximately 1 cm.

F_m = ... [2]

(d) Estimate the percentage uncertainty in your value of F_m. Show your working.

percentage uncertainty = ... [1]

© UCLES 2020

(e) Calculate the force F exerted on the rod using

$$F = \frac{yF_m}{x}.$$

F = ... [1]

(f) Justify the number of significant figures you have given for your value of F.

.....

.....

..... [1]

(g) ● Measure and record the length L and diameter d of the **shorter** rod.

L = ...

d = ...

- Set up the apparatus as shown in Fig. 2.1 using the shorter rod.
- Adjust the apparatus so that the rod is vertical and the wooden strip is parallel to the bench.
- Repeat **(c)** and **(e)**.

F_m = ...

F = ...
[2]

(h) It is suggested that the relationship between F, L and d is

$$E = \frac{64FL^2}{\pi^3 d^4}$$

where E is a constant.

(i) Using your data, calculate two values of E.

first value of E = ...

second value of E = ...
[1]

(ii) Explain whether your results in **(i)** support the suggested relationship.

.....

.....

..... [1]

(i) **(i)** Describe four sources of uncertainty or limitations of the procedure for this experiment.

1. .....

.....

2. .....

.....

3. .....

.....

4. .....

.....

[4]

(ii) Describe four improvements that could be made to this experiment. You may suggest the use of other apparatus or different procedures.

1. .....

.....

2. .....

.....

3. .....

.....

4. .....

.....

[4]

[Total: 20]

© UCLES 2020

BLANK PAGE

Permission to reproduce items where third-party owned material protected by copyright is included has been sought and cleared where possible. Every reasonable effort has been made by the publisher (UCLES) to trace copyright holders, but if any items requiring clearance have unwittingly been included, the publisher will be pleased to make amends at the earliest possible opportunity.

To avoid the issue of disclosure of answer-related information to candidates, all copyright acknowledgements are reproduced online in the Cambridge Assessment International Education Copyright Acknowledgements Booklet. This is produced for each series of examinations and is freely available to download at www.cambridgeinternational.org after the live examination series.

Cambridge Assessment International Education is part of the Cambridge Assessment Group. Cambridge Assessment is the brand name of the University of Cambridge Local Examinations Syndicate (UCLES), which itself is a department of the University of Cambridge.

© UCLES 2020